C1-O-042601

PROCESSING OF MATERIALS WITH ARC PLASMA TORCHES WITH THERMOCHEMICAL CATHODES *

A.S. ANSHAKOV, P.V. DOMAROV, V.A. FALEEV

Kutateladze Institute of Thermophysics SB RAS, Novosibirsk, Russia

Despite the variety of design schemes of electric arc plasma torches, there is always a need for low-power plasma devices (10–50 kW) for heating air and other oxygen-containing media, for example, in the technologies of plasma cutting of metals, plasma spraying, for modifying surfaces and synthesizing various materials. In this case, thermochemical composite cathodes are widely used (Fig. 1). The electron emitter in such cathodes is zirconium or hafnium inserts soldered or pressed into a water-cooled copper body.

The thermochemical cathode is essentially a thermionic cathode, and got its name due to the fact that in air the high-temperature surface of the zirconium (hafnium) insert chemically interacts with nitrogen and oxygen, forming an oxonitride film with good emission properties, electrical conductivity and thermal stability. The resulting film reliably protects the zirconium (hafnium) insert from further oxidation, which ensures the operation of the cathode in air.

On fig. Figure 1 shows the location of a single Hf or Zr insert (Fig. 1a) with a diameter dk and depth Δ l = 3 mm and a recess δ of the insert and modified with four Hf inserts to increase the electrode life (Fig. 1b). The latter differs from the cathode with a single thermal insert in that, in addition to the central insert, three more radial rods are pressed into the copper body at intervals of 120°. The diameter of the central insert is dk = 2.45 mm, the side inserts are 1.6 mm.

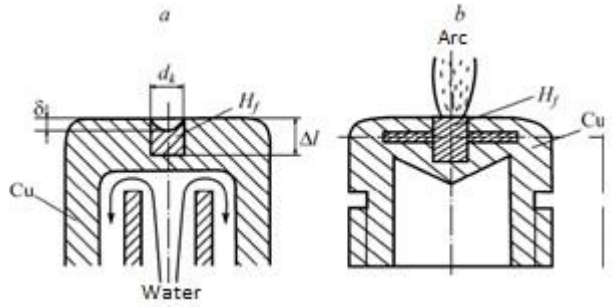

Fig.1. Schemes of thermochemical cathodes

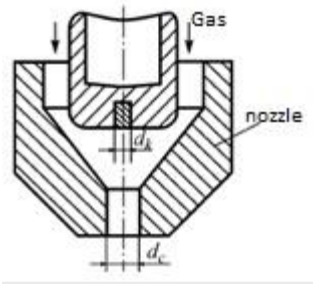

Fig.2. Nozzle chamber of the PVR-402 plasma torch.

On fig. Figure 2 shows the axisymmetric placement of the cathode assembly in the plasma torch for air-plasma cutting of metals (dc = 3.6 mm).

The studies carried out by other authors made it possible to establish the general regularities of the parameters of thermochemical cathodes in terms of current density, heat fluxes, specific erosion, optimization of the insert diameter dk with respect to current, incl. depending on the method of embedding the Hf insert into the copper holder. Despite the significant scatter of experimental data, the specific erosion of thermochemical cathodes has an almost linear dependence on the arc current and amounts to 10 – 11 – 10 – 10 kg/C. At low discharge currents (I ≤ 200 - 300 A), their continuous operation resource reaches several tens of hours.

It is shown that the deepening δ grows with time at a constant current value. The rate of destruction of the cathode in time is uneven. The depth of development of the thermochemical cathode, as well as the tungsten cathode, has an optimum in terms of the diameter of the insert.

On the basis of thermochemical cathodes, highly efficient electric arc plasma torches for cutting metals (Fig. 2), spraying powder materials EDP-167, and heating gas EDP-104 with a power of 10–50 kW have been created. More details about them will be discussed in the article (report).

* This work was carried out under state contract with IT SB RAS (№ 121031800229-1).